REVISIONS				
SYM	DESCRIPTION	REV BY	DATE	APPROVED
A	RELEASED	KDS	12/13/10	KS

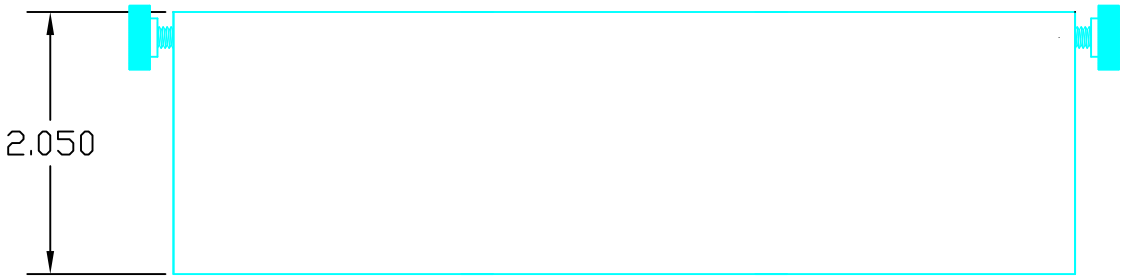

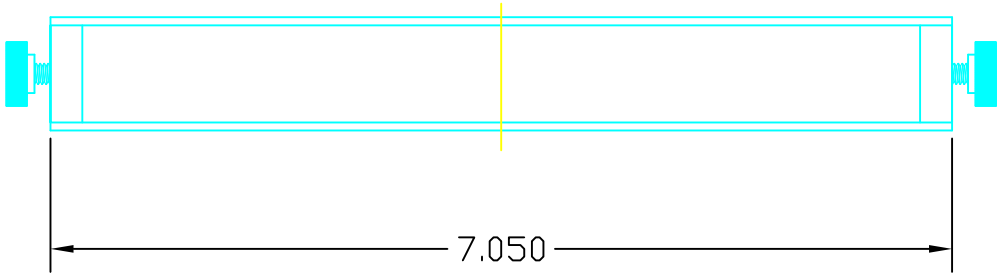

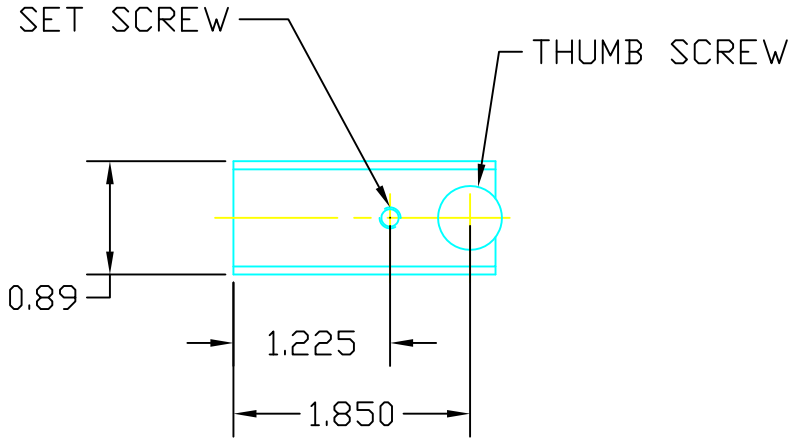

P/N 9560

NOTES
1) USE WITH IT 6.0" ACTIVE LIGHTLINE
2) HEAD MATERIAL: BLACK ANODIZED ALUMINUM
3) ALL FASTENERS TO BE STAINLESS STEEL

MAKE FROM: SEE NOTE AND FEILD OF DRAWING

UNLESS OTHERWISE INDICATED:
INTERPRET PER ANSI/ASME Y14.
DIMENSIONS ARE INCHES AND DO NOT INCLUDE APPLIED FINISHES.
BREAK SHARP EDGES & CORNERS .03/.01 RADIUS OR CHAMFER.
GENERAL TOLERANCES:
3 PLACE DIMENSIONS: ±.005
2 PLACE DIMENSIONS: ±.02
FRACTIONS: 1/64
ANGLES: ±1/2°
MACHINED SURFACES: 63√

APPLICABLE SPECIFICATIONS:

Illumination Technologies, Inc.
Syracuse, NY USA

THIRD ANGLE PROJECTION

DRAWING TITLE: FOCUSING LENS, 6.0" IT LIGHTLINE

DRAWN BY	DATE	SIZE	DRAWING NUMBER	REV SYM
KDS	12/13/10	B	9560	A

CHECKED BY	REL DATE	SCALE	SHEET	OF
KS 12/13/10		NTS	1	1

APPROVED BY DATE

THIS DRAWING AND ITS CONTENTS ARE THE EXCLUSIVE PROPERTY OF ILLUMINATION TECHNOLOGIES, INC. IT IS PROVIDED WITH THE UNDERSTANDING THAT THE INFORMATION CONTAINED HEREIN IS CONFIDENTIAL AND PROPRIETARY. NO REPRODUCTION OR OTHER USE OF THIS DOCUMENT IS ALLOWED WITHOUT WRITTEN PERMISSION OF ILLUMINATION TECHNOLOGIES, INC. OR ITS DULY AUTHORIZED AGENTS.